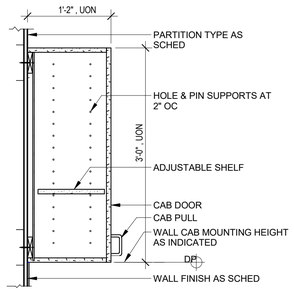

WALL CABINET DET 1" = 1'-0" **D5**

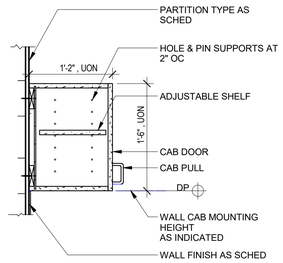

WALL CABINET DET 1" = 1'-0" **D4**

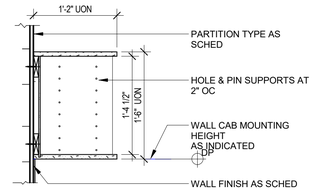

WALL CABINET DET 1" = 1'-0" **D3**

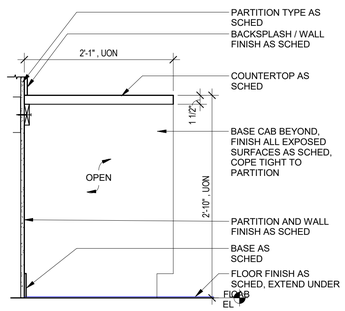

A960-2050A

BASE CABINET - COUNTERTOP DET 1" = 1'-0" **C5**

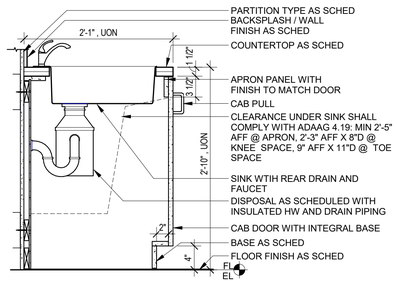

A960-2030B

BASE CABINET W/ACCESSIBLE SINK DET 1" = 1'-0" **C4**

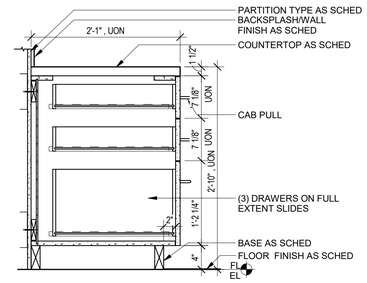

A960-2011C

BASE CABINET W/ DRAWERS DET 1" = 1'-0" **C3**

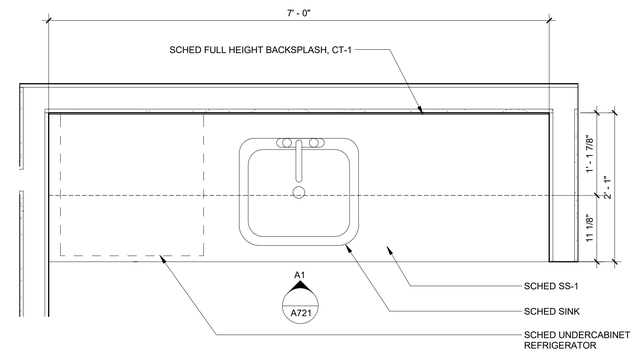

KITCHNETTE ENLARGED PLAN 1" = 1'-0" **C1**

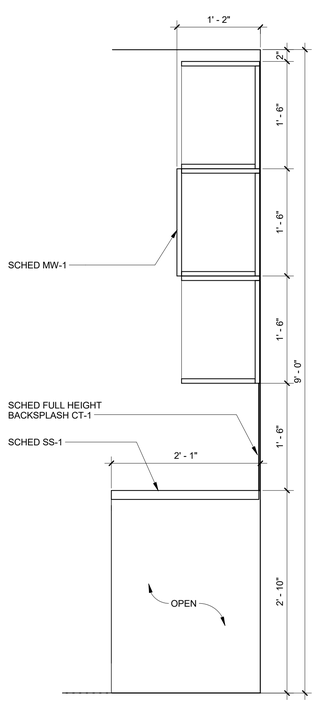

MILLWORK SECTION 1" = 1'-0" **A5**

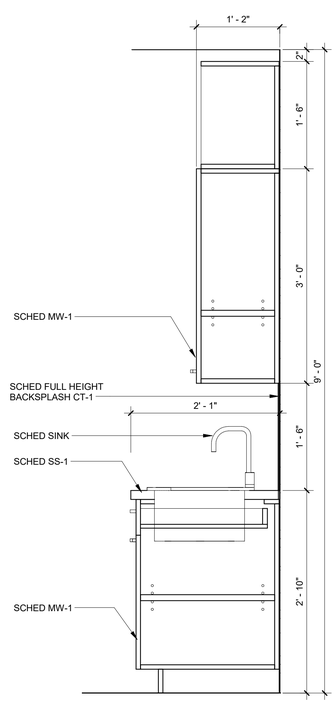

MILLWORK SECTION 1" = 1'-0" **A4**

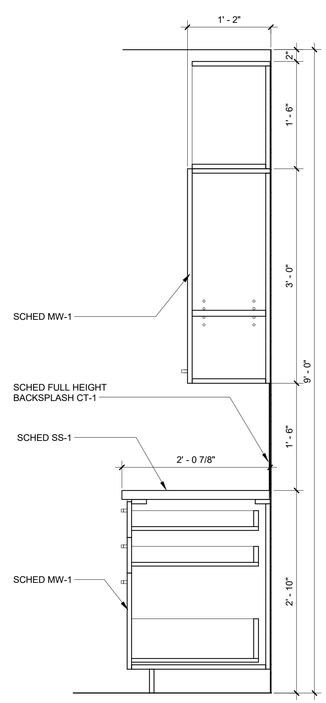

MILLWORK SECTION 1" = 1'-0" **A3**

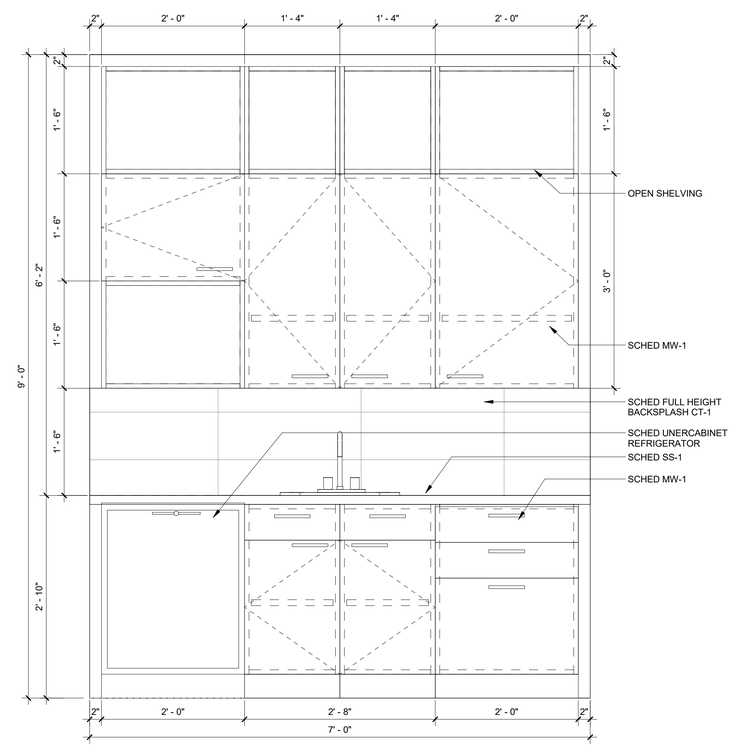

KITCHENETTE ELEVATION 1" = 1'-0" **A1**

W SQUARED ARCHITECTS

O 281 410 1349
www.wsquaredarch.com

ISSUES AND REVISIONS

NO	DATE	DESCRIPTION
C	19 AUG 26	ADDENDUM 2

REGISTERED ARCHITECT JOANNE C. WILSON 23 STATE OF TEXAS

08/23/19

GH SCHOOL
4780 N MAIN STREET

SHEET TITLE
INTERIOR DETAILS

SHEET NUMBER
A721

PROJECT #
A041

©2019 W SQUARED DESIGN, INC.
Architect shall own the overall conceptual design prepared and developed for the project on the intangible exclusive rights or copyright therein.

W:\CloudStation\19.05-GHS_DWG\1902-GHS-Model_ArchR16.rvt
8/26/2019 5:12:24 PM